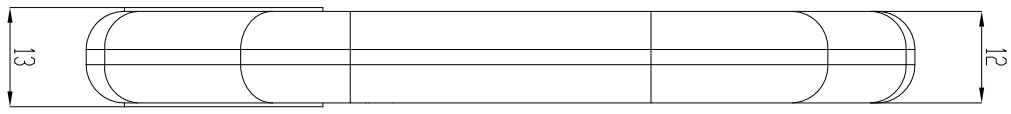
13
12

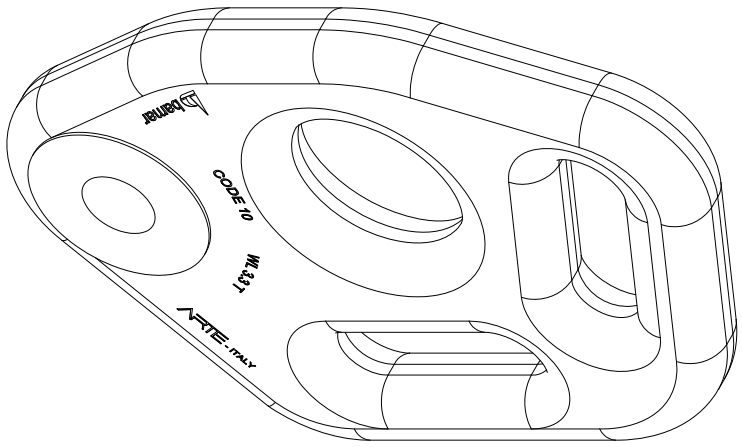
bamar
CODE 10
WL 3.3 T
ATE - ITALY

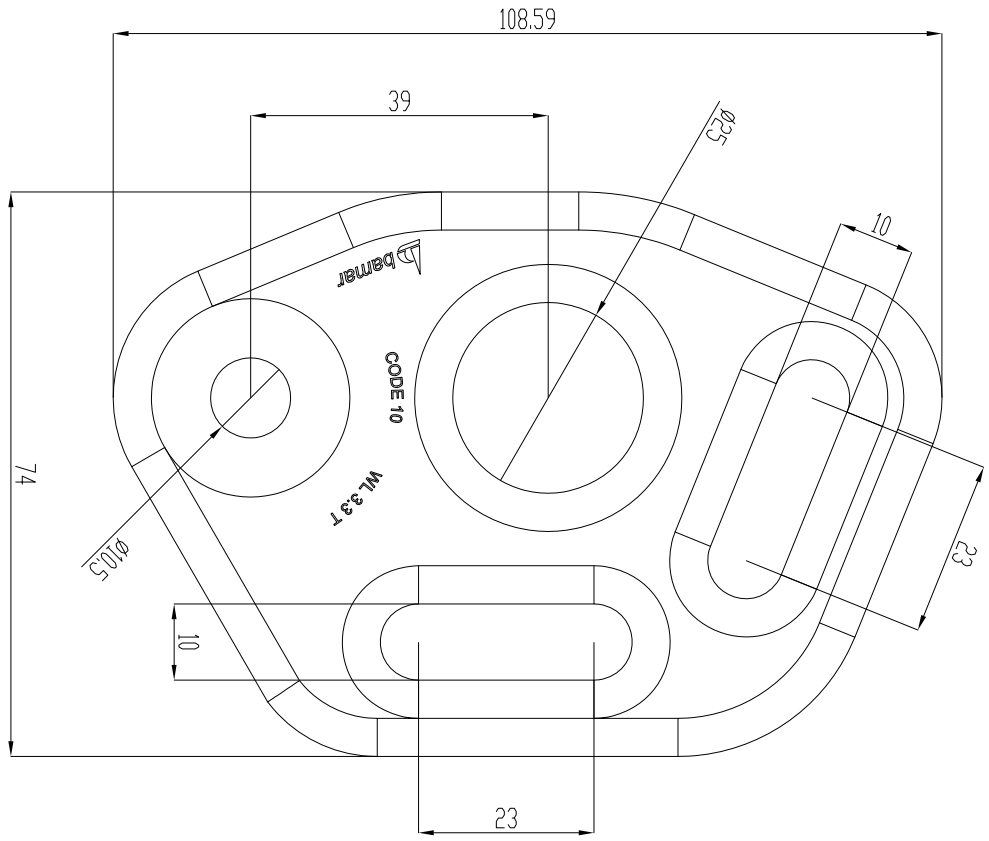
108.59
39
Ø25
10
bamar
CODE 10
WL 3.3 T
74
Ø10.5
23
10
23