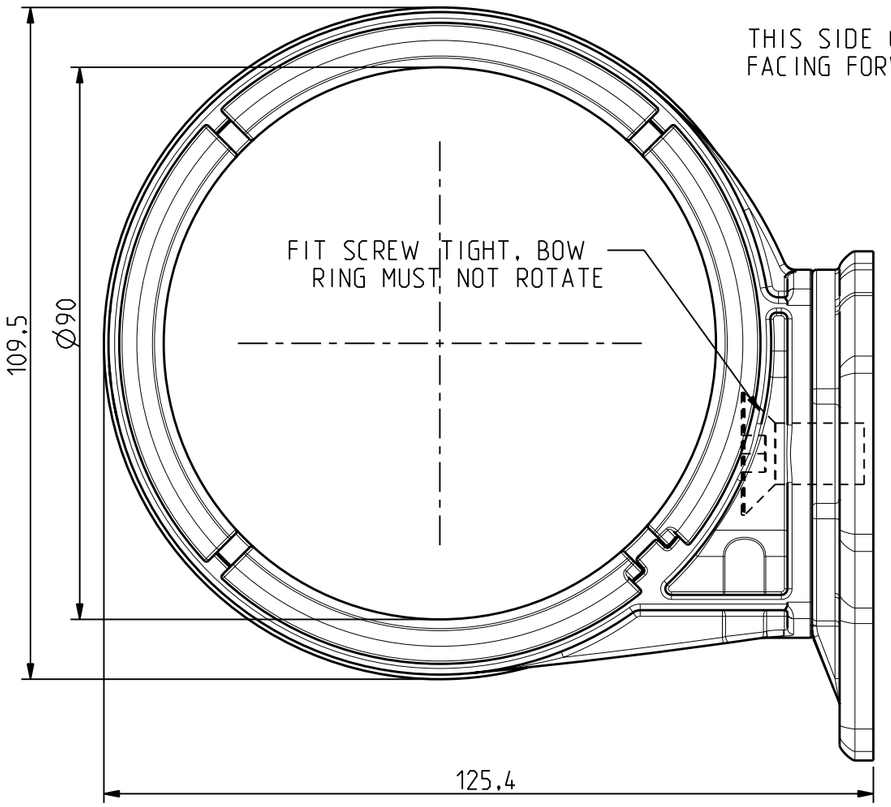

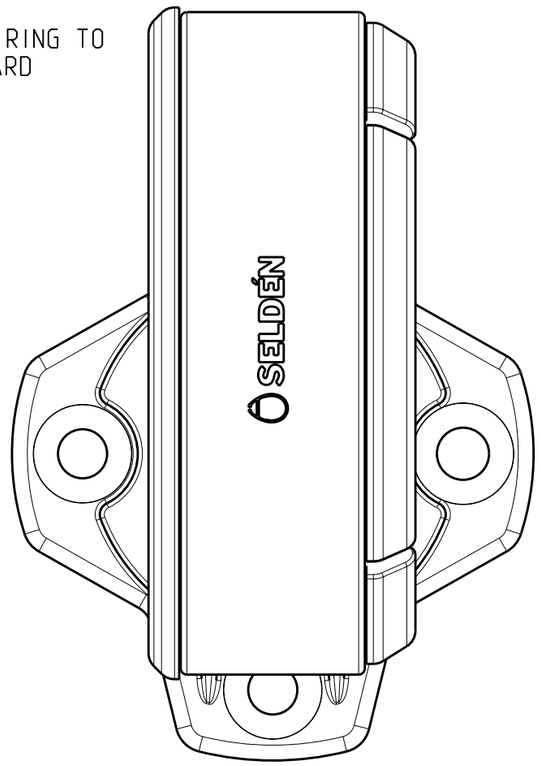

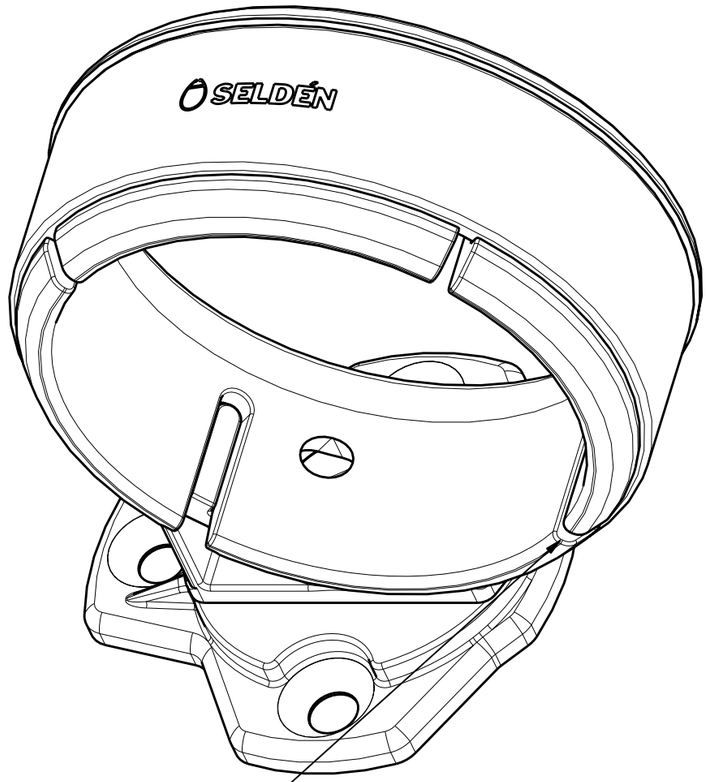

RING CAN BE FITTED IN ANY ANGLE TO PLATE

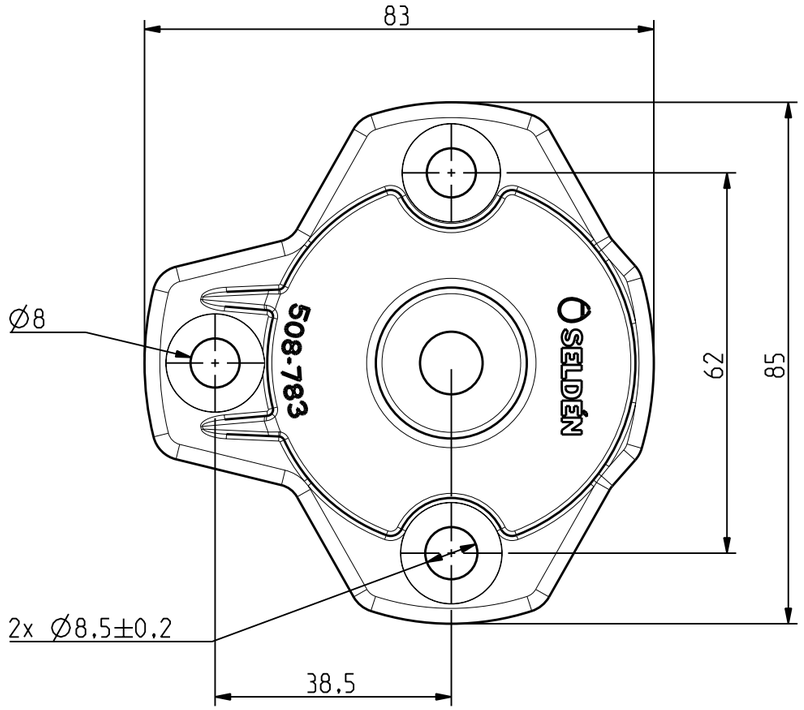

No	Qty	Revision	Date	Sign

SELDÉN

BOW BRACKET
GENN POLE
FOR SECTION ø87, ø88 AND ø89

			Estimated mass properties: Weight [.1]g Volume [.1]cm3		
Tolerance acc. to SS-ISO 2768-x unless othervise stated			Replaced by	Replacing	File 3040
Drawn JG	Date 09-04-15	Scale 1:1	Revision -	Release Production	Approved	Part No. 508-783-04